DualCurtain Outdoor

DualCurtain Outdoor is a wireless bidirectional curtain-type motion detector. With two PIR sensors on each side, the DualCurtain Outdoor detection zone reaches 30 meters, effectively protecting windows, doors, archways, fences, and shopfronts.



The Ajax hub is required for operation
Find the list of compatible hubs on the official website.

ajax.systems/support/devices/dualcurtain-outdoor

- Independent detection zone for each side
- Optional near area detection
- Pet immunity
- Up to 4 years of operation from batteries
- Anti-masking protection
- Communication with the hub at a distance of up to 1,700 m

Accurate threat detection

DualCurtain Outdoor is equipped with two independent PIR sensors and advanced optics on each side. The alarm activates if both sensors on a side detect motion. In combination with software algorithms, this prevents false alarms caused by pets and natural interferences. Temperature compensation allows DualCurtain Outdoor to detect motion effectively throughout the operating temperature range.

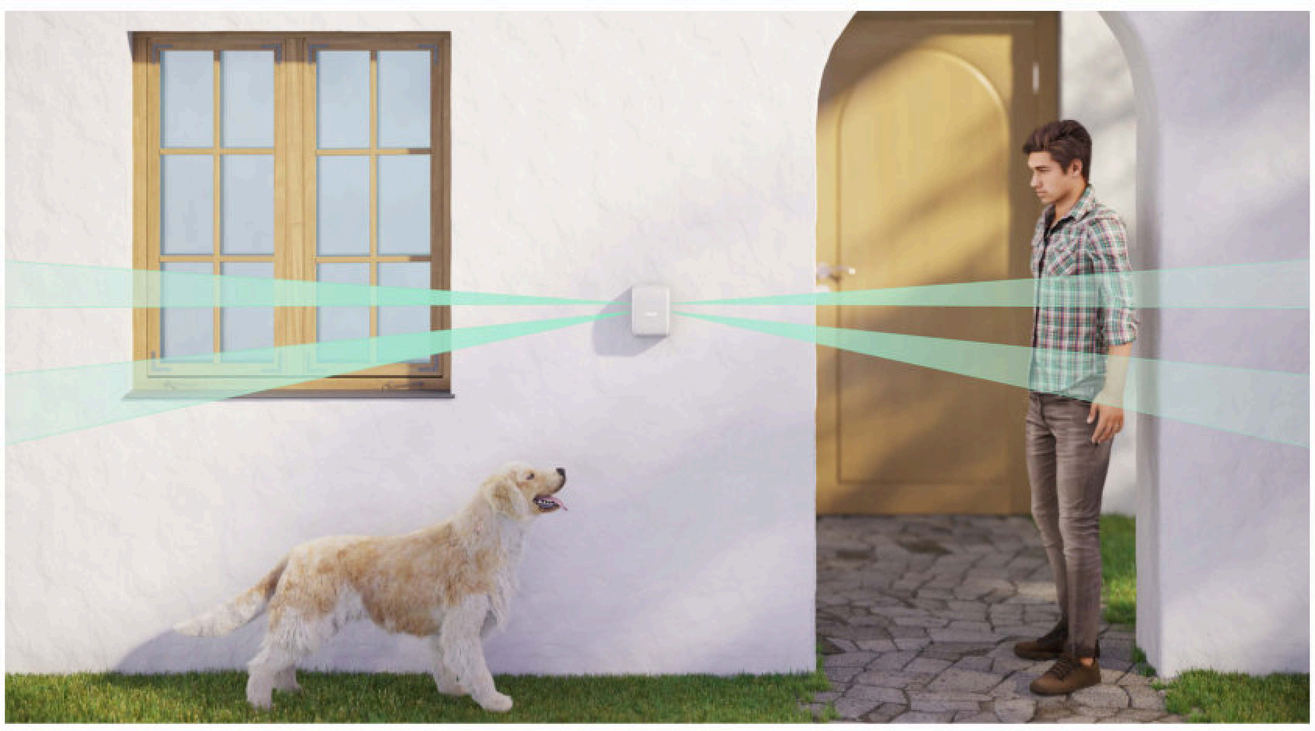

- Up to 15 m coverage each side
- Advanced optics
- Pet immunity
- Temperature compensation

Flexible settings

DualCurtain Outdoor is configured both with toggles on the detector and in the Ajax app. By switching toggles, an installer adjusts the detection zone. In the app, an installer can set up sensitivity, delays, disable particular side, configure sirens reaction or an automation scenario for the detector alarm. Alarms are displayed in notifications and event feed separately for each side of the detector.

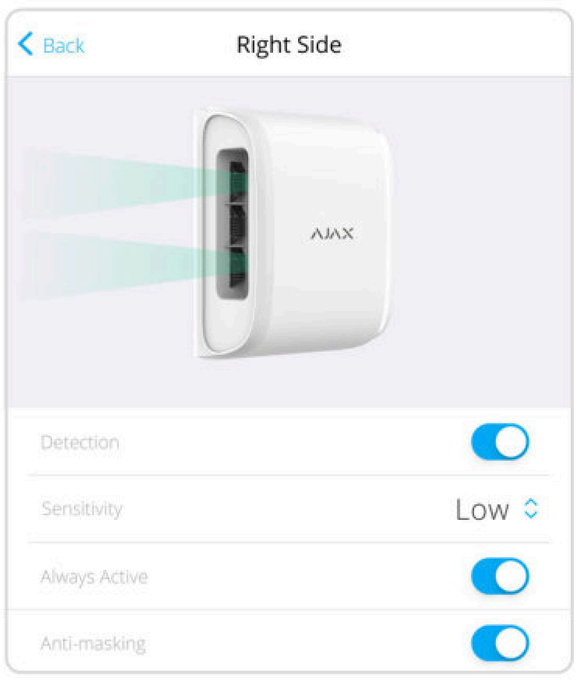



Each side of DualCurtain Outdoor has adjustable detection zone distance and direction. They help to adjust the detector according to the architecture and ensure accurate threat detection.

DualCurtain Outdoor features a unique technology to expand the detection area. When **Near Area Detection** is enabled, the upper IR sensor gains an additional narrow field of view directed at an angle of 40° downward. The Near Area Detection feature is available for both detector sides.

Side view

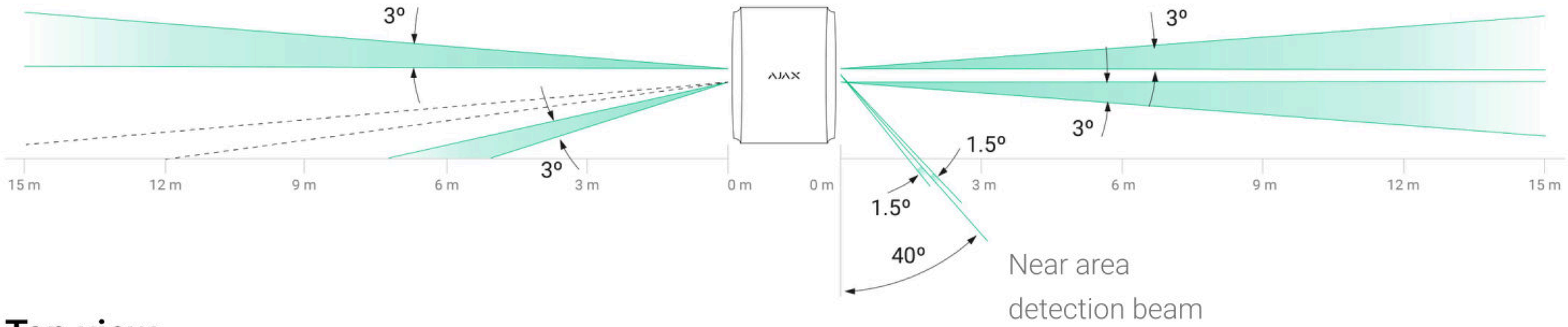

Top view

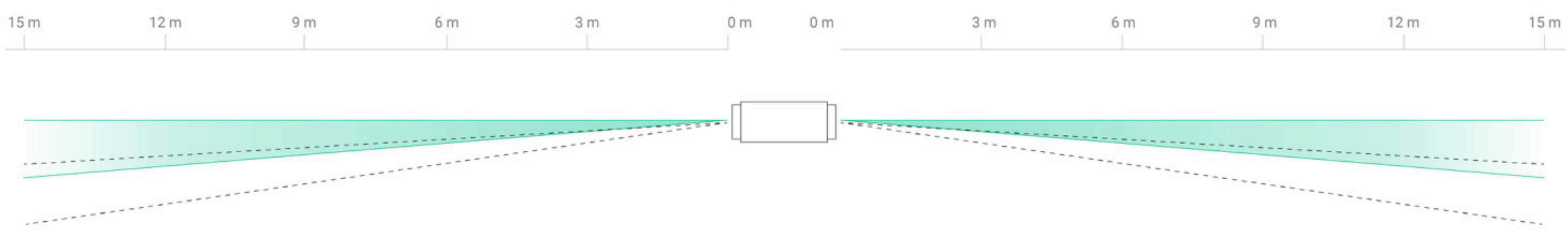

Beam direction angle can be tilted at 3° to avoid protruding parts of the building

Comprehensive sabotage protection

DualCurtain Outdoor features an anti-masking system that alerts of covering the detector view. The detector is also equipped with a tamper button that instantly notifies of detaching DualCurtain Outdoor from the surface. The system needs less than a minute to detect communication loss with the detector.[1]

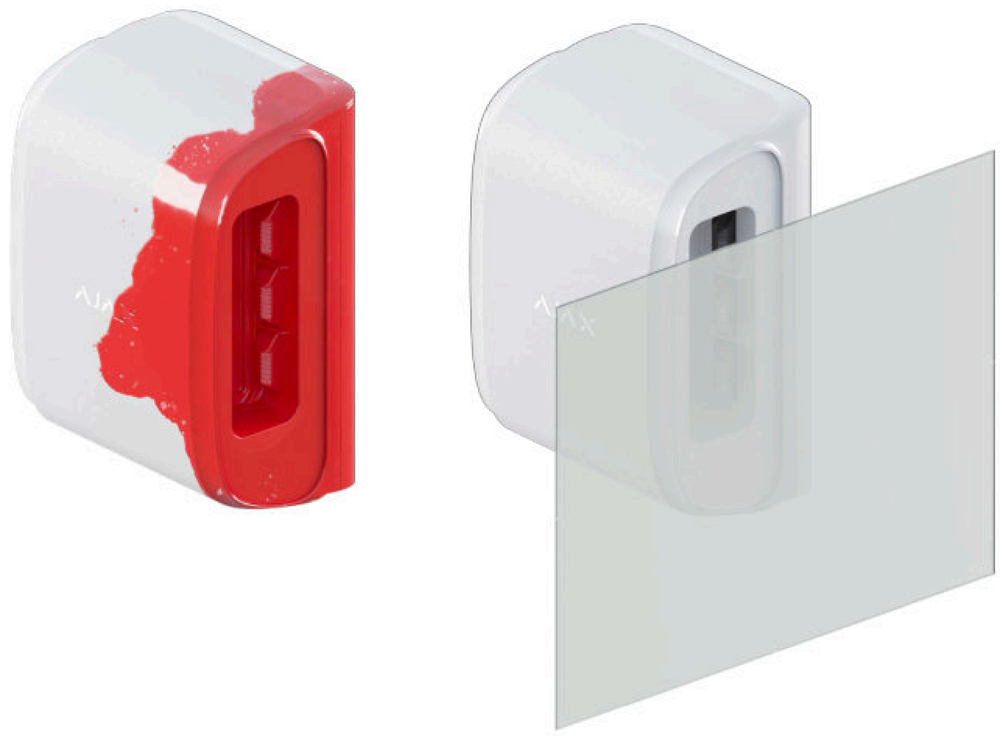

Jeweller

Guaranteed alarm delivery

We've developed the Jeweler radio protocol to ensure system communication. The radio protocol uses frames to synchronize device communications, authentication to prevent forgery, and encryption to protect against hacking.

Two-way communication at a distance of

1,700 meters

5 ReX

radio signal range extenders in the system

Adjustable ping from

12 seconds

Tech Specs

Color	white	Installation	Outdoor/Indoor
Detection distance	up to 15 m (each side)	Protection class	IP54
Sensitivity	low/normal/high	Power supply	2 x CR123, 3 V
Radio communication range	up to 1,700 m	Battery life	up to 4 years
Communication protocol	Jeweller Two-way encrypted communication	Operating temperature range	from −25°C to +60°C
Frequency band	868.0–868.6 MHz [2]	Operation humidity	up to 95%
Compliance	Grade 2 EN 50131, PD 6662:2017 [3] UL369, ULC S306	Dimensions	174 x 123 x 88 mm
Environmental class	IV – Outdoor – General	Weight	615 g
Complete set	DualCurtain Outdoor SmartBracket mounting panel 2 x CR123 batteries (pre-installed) Installation kit Quick start guide	Fixing	SmartBracket

[1] depends on the hub-detector ping settings
[2] when installed indoors
[3] depends on the region of sale